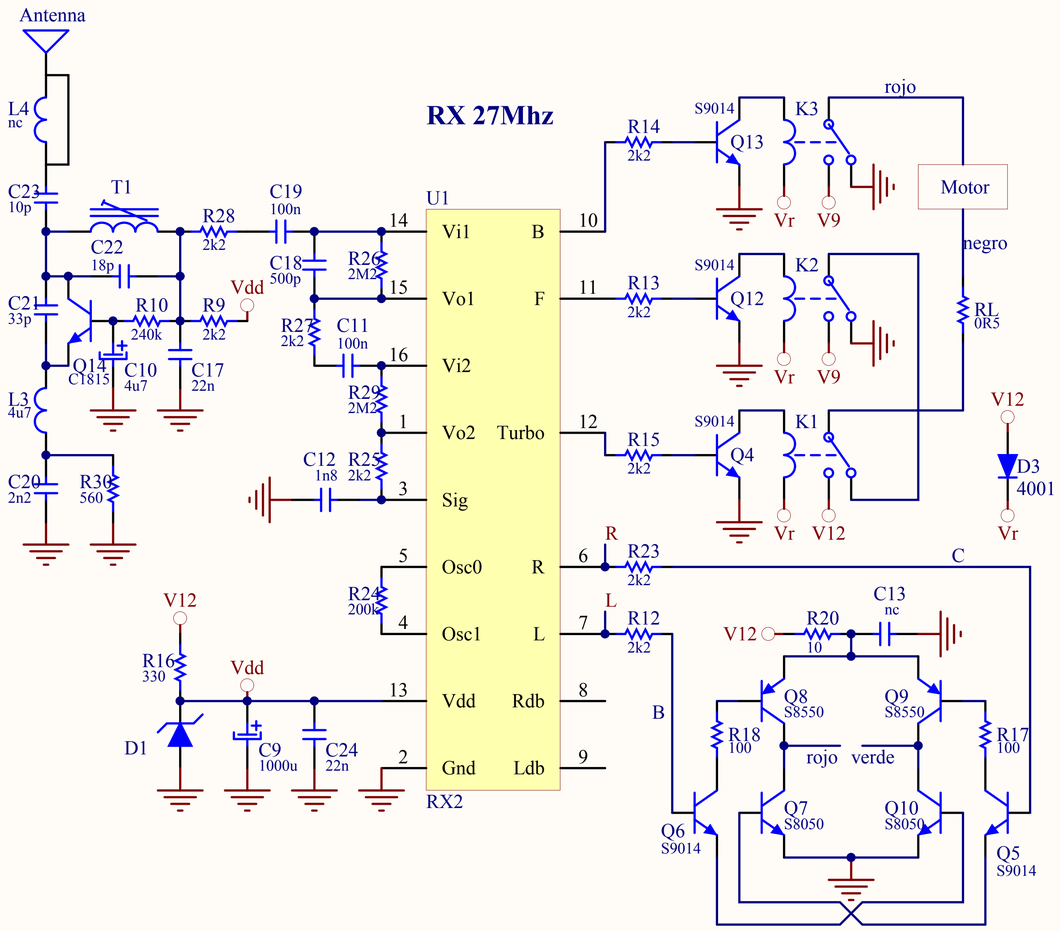

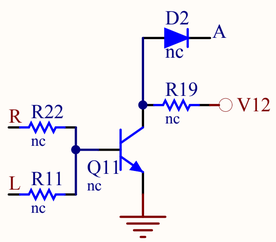

Notes:

To receive from Tx 27Mhz with Fsync = 70Khz (330k), make R24 = 420k (470k+3M9)

Aviones Manuelo

Mar Cantábrico 1 28820 Coslada (Madrid) Spain

Design: Manuel Lagares
Draw: Manuel Lagares
Approval Rosa Navas

Nr:

Race King 727

Sheet of

File:	Date:	PCB:	Rel: